7.2.5 Replacement of parts

7.2.5.1 Replacing parts in the battery compartment

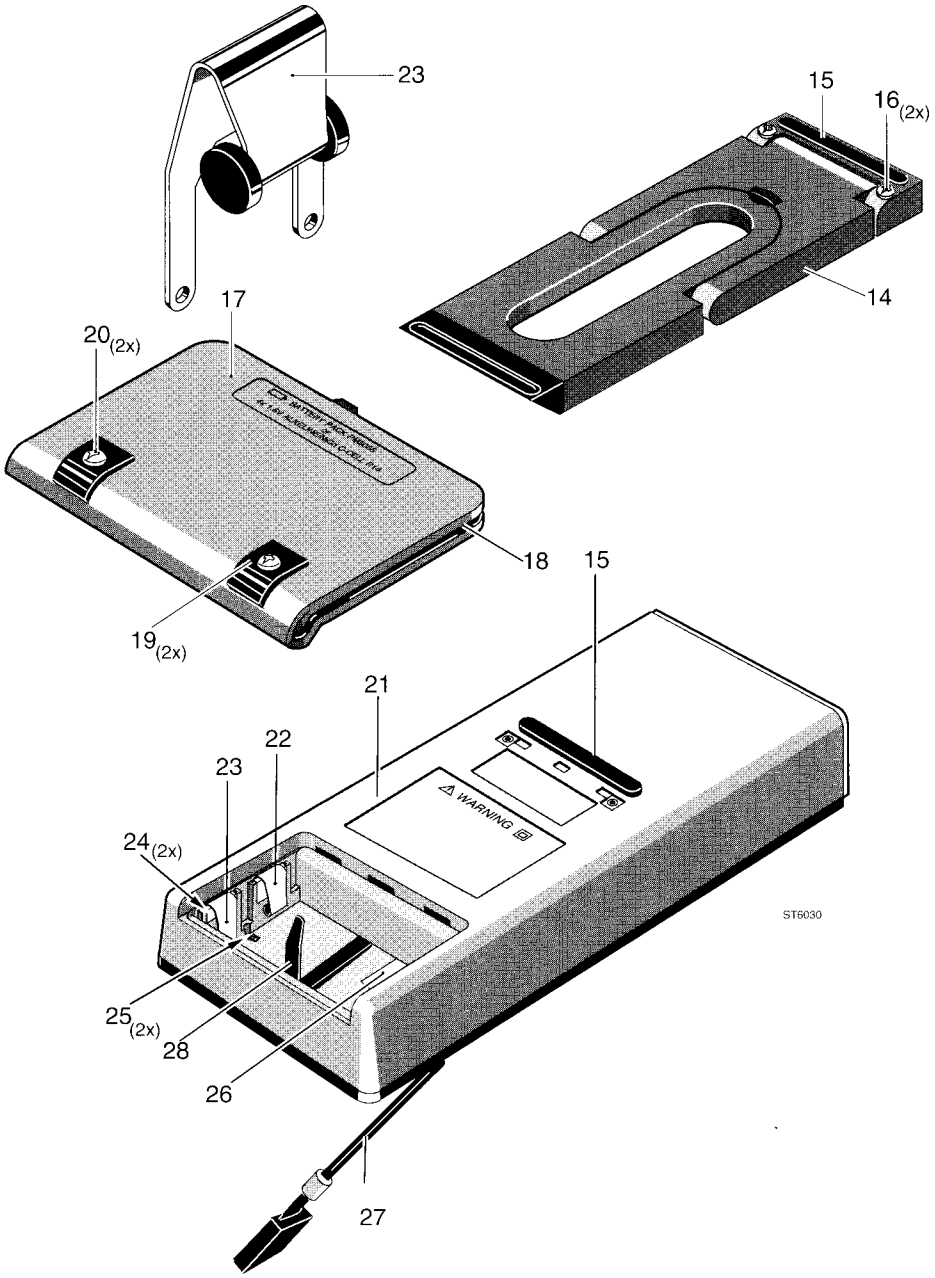

Figure 7.10 Replacing parts in battery compartment

Referring to figure 7.10, use the following procedure for replacements in the battery compartment.

Battery cover assembly replacement

1. The battery cover (item 17) is secured to the ScopeMeter with two black M3 Torx screws (item 20). Use a Torx screwdriver to loosen the two screws (do not remove them) from the battery cover.

2. Lift the battery cover from the ScopeMeter.